MONTANA STATE UNIVERSITY

UNIVERSITY FACILITIES MANAGEMENT

Sixth Avenue and Grant Street • P.O. Box 172760 • Bozeman, Montana 59717-2760
Phone: (406) 994-5413 • Fax: (406) 994-5665

ADDENDUM NO. 1 - OUTLINE AND SUMMARY INFORMATION

Project Name: Johnstone Complex Re-roof PPA No.: 26-1535
Location: Montana State University, Bozeman Date: 11/24/2026

To:All Plan Holders of Record

*The Plans and Specification prepared by **A&E + SMA Design** dated **November 5, 2026**, shall be clarified and added as follow. The bidder proposes to perform all the following clarifications or changes. It is understood that the Base Bid shall include any modification of Work or Additional Work that may be required by reason of the following change or clarifications.*

The Bidders are to acknowledge the receipt of this Addendum by inserting its number and date into their Bid Forms. Failure to acknowledge may subject the Bidder to disqualification and rejection of the bid. This Addendum forms part of the Contract Documents as if bound therein and modifies them as follows:

I. AMENDMENTS TO THE PROJECT MANUAL

A. For modifications to drawings and project manual specifications, see attached A&E + SMA Addendum 1

II. ATTACHMENTS

A. A&E + SMA Design Addendum 1

B. Pre-bid Walk Through Sign-in Sheet

C. Building Names Reference Map

D. Tetra-Tech Hazmat test roof core diagrams

Addendum 01

Addendum Number:	1.0	**Date Issued:**	Nov. 24th 2026
Project Name:	Johnstone Center Re-Roof	**Project Number:**	26130.00
Pages in Addendum:	**Drawings: (1 sheet) 24" x 36" (ARCH D)** **Specifications: (12 sheets) 8" x 11"** **Addendum Narrative: (4 sheets) 8" x 11"**	**Prepared By:**	Jill Bacheller | A&E+SMA Design
Issued To:	All Bidders | Montana State University		

The additions, clarifications, and/or corrections contained herein shall be made to the Project Specification Manual, Drawings, and/or Schedules for the above referenced project, and shall be included in the scope of work and proposals to be submitted. Descriptions or references made below to the Project Specification Manual and Drawings shall be used as a general guide only. Bidder shall determine the extent of work affected by any addenda items. This Addendum consists of the following (in addition to any previous addenda or issuance):

General Bid Question Responses:

Bid Package #1 – Bid Questions 11.17.2026

1) Where an existing drain body is sound, would MSU accept a retrofit insert drain or a drain extension?
   a) **MSU Response:** No, a drain retrofit will not be acceptable.
2) Would a standard 30 inch wide Carlisle TPO walkway roll, heat welded to the new membrane and installed along the routes shown, satisfy A2.3 keynote 07-16 and detail 3/A2.6?
   a) **A&E+SMA Response:** Yes, 30" Carlisle TPO or similarly performing alternate will suffice; Please formally submit a substitution request.
3) On the MEMB-3 roofs, D2.1 keynote 02-08 calls for removing the asphalt roofing and any *damaged* insulation. Section 011000, paragraph 1.1.B, includes removal of the existing roofing assemblies including insulation, and installation of new insulation and decking. Should bidders retain sound insulation on these roofs or remove the complete assembly to the deck? Given that A2.3 assembly R-1 shows an existing precast concrete deck, please identify any deck replacement required in the base bid and how concealed deck repairs will be handled if we retain existing insulation in these areas.
   a) **A&E+SMA Response:** Please remove the existing roofing assemblies to deck. If damage is found to the concrete deck, it will be resolved with a change order.
4) A2.3 keynote 07-01 calls for R-30 insulation, ¼ inch gypsum cover board and mechanically fastened TPO over the existing membrane. Assembly R-1 and Section 075423, paragraphs 2.5, 2.10.A.1, 3.3.C through D, and 3.4.C, show an adhered vapor retarder, adhered insulation, ½ inch Type X cover board and fully adhered TPO. Which complete assembly should we carry in the base bid? If it varies by roof area, please identify where each assembly applies.

a) **A&E+SMA Response:** Section 075423 is correct; Fully adhered TPO utilized on this project. The new roof assembly does not vary by roof area, however existing roof conditions do vary in thickness. Reference report provided by TetraTech.

5) R-1 calls for an average R30, while keynote 07-01 calls for continuous R30 insulation. Section 075423 lists 1½ in boards. What minimum R-value is required at drains?
   a) **A&E+SMA Response:** Average R-30 Insulation is required per the assembly type and IECC.
      i) 2024/2021 IECC C402.2.1.2 Determined minimum thickness of above-deck roof insulation at its lowest point, gutter edge, roof drain or scupper shall not be less than 1 inch.
6) On the TPO roofing membrane, per spec 75423-115 2.2: Manufacturers A,C,D,E are all spec'd to be Fleeceback. Manufacture B does not reference Fleeceback (Ultra is their generic smooth membrane)
   a) **A&E+SMA Response:** Spec Section 075423 2.2.b Revised and reissued in Addendum 1.0.
7) Then of that same note, in the same spec section 75423-115 2.9 A1 references standard reinforced TPO (no mention of Fleeceback)
   a) **A&E+SMA Response:** 075423 2.9 A.1 Revised and reissued in Addendum 1.0.
8) On the poly iso insulation per spec 75423-116 2.11 A3 shows 1.5" thickness with no overall r-value or thickness desired. However, on the main roof plan page A2.3, keynote 07-01 shows r-30 continues poly iso
   a) **A&E+SMA Response:** Average R-30 required per the assembly type. Minimum thickness per IECC C402.2.1.2.
9) Do you have pictures of the cores taken or at least how thick the existing roofs are?
   a) **A&E+SMA Response:** Core thicknesses are provided in the report by TetraTech.
10) The plans say to raise Curbs or pipes to accommodate the new insulation heights, but we have no idea what thickness is there.
   a) **A&E+SMA Response:** Please refer to Montana Energy Code 2024 – C402.1.3.2 to determine thickness of insulation. Average R-30 continuous insulation required. Parapet and Curb heights will be increased as necessary to achieve R-value required.
11) Note 07-01 has ¼" cover bd, R-30 mechanically attached over existing. R-1 assembly has everything adhered with a ½" cover bd. It also has an avg R-30 with taper and base layer, do you want an avg. R-30 or a minimum R-30?
   a) **A&E+SMA Response:** Note 07-01 on A2.1 updated and reissued in Addendum 1.0.
12) I will assume the roof requires taper insulation everywhere per the assembly?
   a) **A&E+SMA Response:** Correct; Average R-30 continuous insulation. New assembly type does not vary by roof area.
13) D2.1 note 02-08 remove asphalt and inspect insulation.
   a) **A&E+SMA Response:** Remove existing asphalt roofing, and insulation to deck.
14) Do you have a drain specified? Could we use a drain insert since we can only access the drains from the roof and not below?
   a) **A&E+SMA Response:** Issued additional Specification Section 221423
      i) Drains may only be accessed from the Roof. Interior Access may be granted at ownership's discretion. Coordinate with Project Manager.

15) 075423-116 TPO Roofing 2.10 COVER BOARDS A. Cover Boards, CB-1: Glass-mat faced gypsum panels complying with ASTM C1177/C1177M. Thickness: 1/2 inch , Type X, fire-resistant. This is not a type x ul listed fire resistant board, only 5/8" thicknesses are fire resistant ul listed type x boards.
    a) A&E+SMA Response: ½" Cover boards are acceptable. See revision to spec section 075423 issued in Addendum 1.0.

16) Keynote 07-09 notes new roof drains, per detail and spec. There is no detail or spec included currently, also where there are overflows do the overflows need replaced also?
    a) See Spec Section 221423 issued in Addendum 1.0.
    b) See Detail 6/A2.5 (Not reissued/revised in Addendum 1.0.)
    c) All drains are to be replaced, inclusive of overflow drains.

17) The roof cores do not note what the roof deck type is, is there information available for that?
    a) A&E+SMA Response: Roof deck type is concrete.

Drawings:

A2.3 ROOF PLAN

ADDED:

- Keynote 07-17 – See Clouded area of drawings for additional information.
- Roof plan Notes 10 and 11: See Clouded area of drawings for additional information.

MODIFIED:

- Keynote 07-01 – See Clouded area of drawings for additional information.

Specifications):

ADD: The following specification section(s) in their entirety

SECTION 221423 – STORM DRAINAGE PIPING SPECIALTIES – *two pages*

MODIFY: The following specification section(s)

TABLE OF CONTENTS - *two pages*

SECTION 075423 – THERMOPLASTIC – POLYOLEFIN (TPO) ROOFING – *seven pages*
SECTION 999991 – HAZARDOUS MATERIALS COVER SHEET – *one page*

Prior Approvals:

Review is for conformance with the design concept of the project and compliance with the information given in the contract documents. Contractor is responsible for dimensions and quantities to be confirmed and correlated to the job site; for information that pertains solely to the fabrication processes or to techniques of construction; and for coordination of work of all trades. Any substitutions shall meet the specification for the product specified. Any costs associated with modifications necessary due to a product substitution shall be the responsibility of the contractor.

Approval of a particular product does not constitute an approval of all other related products or materials within a particular system or assembly, which may also need to be submitted for separately for approval, per project specifications; where some products or materials must be sourced from the same manufacturer as adjacent or related products in the completed system or assembly, for material compatibility and/or warranty.

Specification Section	Original Specified Product	Substitution	Approval Status

END OF ADDENDUM

TABLE OF CONTENTS

DIVISION 01 - GENERAL REQUIREMENTS

011000	SUMMARY	2
012000	PRICE AND PAYMENT PROCEDURES	3
012200	UNIT PRICES	1
012300	ALTERNATES	1
012500	SUBSTITUTION PROCEDURES	3
013000	ADMINISTRATIVE REQUIREMENTS	12
013216	CONSTRUCTION PROGRESS SCHEDULE	3
014000	QUALITY REQUIREMENTS	7
014216	DEFINITIONS	1
015000	TEMPORARY FACILITIES AND CONTROLS	3
015713	TEMPORARY EROSION AND SEDIMENT CONTROL	6
015719	TEMPORARY ENVIRONMENTAL CONTROLS	5
015813	TEMPORARY PROJECT SIGNAGE	2
016000	PRODUCT REQUIREMENTS	4
016116	VOLATILE ORGANIC COMPOUND (VOC) CONTENT RESTRICTIONS	3
017000	EXECUTION AND CLOSEOUT REQUIREMENTS	10
017010	MT DHHS CLOSEOUT DOCUMENTS	2
017419	CONSTRUCTION WASTE MANAGEMENT AND DISPOSAL	5
017610	TEMPORARY PROTECTIVE COVERINGS	3
017800	CLOSEOUT SUBMITTALS	4
017900	DEMONSTRATION AND TRAINING	3
019113	GENERAL COMMISSIONING REQUIREMENTS	8

DIVISION 02 - EXISTING CONDITIONS

024100	DEMOLITION	4

DIVISION 06 - WOOD, PLASTICS, AND COMPOSITES

061053	MISCELLANEOUS ROUGH CARPENTRY	3

DIVISION 07 - THERMAL AND MOISTURE PROTECTION

075423	THERMOPLASTIC-POLYOLEFIN (TPO) ROOFING *AD01	7
076200	SHEET METAL FLASHING AND TRIM	3
077100	ROOF SPECIALTIES	2
077123	MANUFACTURED GUTTERS AND DOWNSPOUTS	2
077200	ROOF ACCESSORIES	3
079200	JOINT SEALANTS	5
079513	EXPANSION JOINT COVER ASSEMBLIES	2

DIVISION 09 - FINISHES

099100	PAINTING	6

DIVISION 11 - EQUIPMENT

118129	FACILITY FALL PROTECTION	3

DIVISION 22 - PLUMBING

221423	STORM DRAINAGE PIPING SPECIALTIES *AD01	2

DIVISION 99 - ADMINISTRATION

999991	HAZARDOUS MATERIALS COVER SHEET *AD01	1

SECTION 075423
THERMOPLASTIC-POLYOLEFIN (TPO) ROOFING

PART 1 GENERAL

1.1 REFERENCE STANDARDS

A. ASTM C1177/C1177M - Standard Specification for Glass Mat Gypsum Substrate for Use as Sheathing; 2024.

B. ASTM C1289 - Standard Specification for Faced Rigid Cellular Polyisocyanurate Thermal Insulation Board; 2025.

C. ASTM D5957 - Standard Guide for Flood Testing Horizontal Waterproofing Installations; 1998 (Reapproved 2021).

D. ASTM D6878/D6878M - Standard Specification for Thermoplastic Polyolefin-Based Sheet Roofing; 2021.

E. ASTM E1980 - Standard Practice for Calculating Solar Reflectance Index of Horizontal and Low-Sloped Opaque Surfaces; 2024.

F. FM (AG) - FM Approval Guide; Current Edition.

G. NRCA (WM) - The NRCA Waterproofing Manual; 2021.

1.2 ADMINISTRATIVE REQUIREMENTS

A. Preinstallation Meeting: Convene one week before starting work of this section.

1. Review preparation and installation procedures and coordinating and scheduling required with related work.\
2. Meet with Owner, Architect, Owner's insurer if applicable, testing and inspecting agency representative, roofing installer, membrane roofing manufacturer's representative, deck installer, roof accessories and roof-mounted equipment installers, and members of any other trades whose work interfaces or affects membrane roofing.
3. Review methods and procedures of membrane roofing installation, including manufacturer's written instructions.
4. Review and finalize construction schedule.
5. Verify availability of materials, installer's personnel, equipment, and facilities needed to make progress and avoid delays.
6. Examine deck substrate conditions and finishes for compliance with requirements, including flatness and fastening.
7. Review structural load limitations of roof deck during and after membrane roofing installation.
8. Review base flashings, special roofing details, roof drainage, roof penetrations, equipment curbs, and conditions of other construction that affects membrane roofing.
9. Review governing regulations and requirements for insurance and certificates if applicable.
10. Review temporary protection requirements for membrane roofing during and after installation. See 017610 - Temporary Protective Coverings.
11. Review roof observation and repair procedures after membrane roofing installation.

1.3 SUBMITTALS

A. See Section 013000 - Administrative Requirements for submittal procedures.

B. See Section 013000 - Administrative Requirements for submittal procedures.

C. Product Data: Provide data indicating membrane materials, flashing materials, insulation, vapor retarder, surfacing, and fasteners.

D. Shop Drawings: Submit drawings that indicate joint or termination detail conditions, conditions of interface with other materials, and paver layout.
E. Wind Uplift Resistance Certificate: Certify that products meet or exceed wind uplift performance requirements.
F. Manufacturer's Certificate: Certify that products meet or exceed specified requirements.
G. Manufacturer's Installation Instructions: Indicate membrane seaming precautions and perimeter conditions requiring special attention.
H. Manufacturer's Field Reports: Indicate procedures followed, ambient temperatures, humidity, wind velocity during application, and supplementary instructions given.
I. Manufacturer's qualification statement.
J. Installer's qualification statement.
K. Maintenance Data: For membrane roofing to include
L. Warranty Documentation:
    1. Submit manufacturer warranty and ensure that forms have been completed in Owner's name and registered with manufacturer.
    2. Submit installer's written verification that installation complies with warranty conditions for waterproof membrane.
    3. Submit manufacturer's certified statement that existing roof warranty has not been affected by Work performed under this Section.

1.4 QUALITY ASSURANCE
A. Manufacturer Qualifications: Company specializing in manufacturing products specified in this section with minimum three years of documented experience.

1.5 DELIVERY, STORAGE, AND HANDLING
A. See Section 017419 - Construction Waste Management and Disposal for packaging waste requirements.
B. Deliver materials in manufacturer's original containers, dry and undamaged, with seals and labels intact, unless otherwise indicated.
C. Store materials in weather protected environment, clear of ground and moisture.
D. Ensure storage and staging of materials does not exceed static and dynamic load-bearing capacities of roof decking.
E. Protect foam insulation from direct exposure to sunlight.

1.6 FIELD CONDITIONS
A. Do not apply roofing membrane during unsuitable weather.
B. Do not apply roofing membrane when ambient temperature is below 40 degrees F or above temperature indicated in manufacturer's written instructions.
C. Do not apply roofing membrane to damp or frozen deck surface or when precipitation is expected or occurring.
D. Do not expose materials vulnerable to water or sun damage in quantities greater than can be weatherproofed the same day.
E. Schedule applications so that no partially completed sections of roof are left exposed at end of workday.

1.7 WARRANTY
A. See Section 017800 - Closeout Submittals for additional warranty requirements.
B. Material Warranty: Provide membrane manufacturer's warranty agreeing to replace material that shows manufacturing defects within five years after installation.

C. System Warranty: Provide manufacturer's system warranty agreeing to repair or replace roofing that leaks or is damaged due to wind or other natural causes.
   1. Warranty Term: 20 years.
   2. For repair and replacement include costs of both material and labor in warranty.

PART 2 PRODUCTS

2.1 MANUFACTURERS

2.2 THERMOPLASTIC POLYOLEFIN (TPO) MEMBRANE ROOFING MATERIALS:
- A. Carlisle SynTec Systems; FleeceBACK TPO Adhered.
- B. Elevate; UltraPly TPO XR Membrane. *AD01
- C. Flex Membrane International Corporation; Flex TPO Plus.
- D. GAF; EverGuard Fleece Back TPO 60 mil.
- E. Versico Roofing Systems; VersiFleece TPO.
- F. Substitutions: See Section 016000 - Product Requirements.

2.3 INSULATION:
- A. Carlisle SynTec Systems.
- B. GAF
- C. Owens Corning Corporation
- D. Versico Roofing Systems.
- E. Substitutions: See Section 016000 - Product Requirements.

2.4 ROOFING

2.5 THERMOPLASTIC MEMBRANE ROOFING: ONE PLY MEMBRANE, FULLY ADHERED, OVER VAPOR RETARDER, INSULATION, AND COVER BOARD.

2.6 ROOFING ASSEMBLY REQUIREMENTS:
- A. Solar Reflectance Index (SRI): Minimum of 64 based on three-year aged value; if three-year aged data is not available, minimum of 82 initial value.
   1. Calculate SRI in accordance with ASTM E1980.
   2. Field applied coating may not be used to achieve specified SRI.

2.7 ACCEPTABLE INSULATION TYPES - CONSTANT THICKNESS APPLICATION:
- A. Minimum 2 layers of polyisocyanurate board.

2.8 ACCEPTABLE INSULATION TYPES - TAPERED APPLICATION: ANY TYPE THAT MEETS REQUIREMENTS AND IS APPROVED BY MEMBRANE MANUFACTURER FOR APPLICATION.

2.9 MEMBRANE ROOFING AND ASSOCIATED MATERIALS
- A. Membrane Roofing Materials:
   1. TPO - **MEMB-1**: Thermoplastic polyolefin (TPO) complying with ASTM D6878/D6878M, sheet contains reinforcing fabrics or scrims and laminated with a fleece backing. *AD01
      a. Thickness: 60 mil, 0.060 inch, minimum.
   2. Sheet Width: Limit width tot 120 inches maxiumu, when ambient temperatures are less than 40 degrees F for extended period of time during installation.

a. Adhered Application: Limit width to 120 inches, maximum, when ambient temperatures are less than 40 degrees F for extended period of time during installation.

3. Color: White.

B. Seaming Materials: As recommended by membrane manufacturer.

C. Vapor Retarder: Material approved by roof manufacturer complying with requirements of fire rating classification; compatible with roofing and insulation materials.

1. fire-retardant adhesive.
2. Fire-retardant adhesive.

D. Flexible Flashing Material: Same material as membrane.

2.10 COVER BOARDS

A. Cover Boards, **CB-1**: Glass-mat faced gypsum panels complying with ASTM C1177/C1177M.

1. Thickness: 1/2 inch *AD01
2. Products: See Section 092116 - Gypsum Board Assemblies.
   a. Georgia-Pacific; DensDeck Prime with EONIC Technology.
   b. Gold Bond Building Products, LLC provided by National Gypsum Company; DEXcell Glass Mat Roof Board.
   c. USG Corporation; Securock Ultralight Glass-Mat Roof Board.
   d. Substitutions: See Section 016000 - Product Requirements.

2.11 INSULATION

A. Polyisocyanurate (ISO) Board Insulation, INSUL-1: Rigid cellular foam, complying with ASTM C1289.

1. Classifications:
   a. Type II: Faced with either cellulosic facers or glass fiber mat facers on both major surfaces of the core foam.
      1) Class 1 - Faced with glass fiber reinforced cellulosic facers on both major surfaces of the core foam.
      2) Compressive Strength: Classes 1-2-3, Grade 1, 16 psi (110 kPa), minimum.
      3) Thermal Resistance, R-value: At 1-1/2 inches thick; Class 1, Grades 1-2-3, 8.4 (1.48), minimum, at 75 degrees F.
      4)
2. Board Size: 48 by 96 inches.
3. Board Thickness: 1.5 inches.
4. Tapered Board: Slope as indicated; minimum thickness 1/2 inch; fabricate of fewest layers possible.
5. Board Edges: Square.
6. Products:
   a. GAF; EnergyGuard Polyiso Insulation.
   b. Versico Roofing Systems; SecurShield Insulation.
   c. Substitutions: See Section 016000 - Product Requirements.

2.12 ACCESSORIES

A. Stack Boots: Prefabricated flexible boot and collar for pipe stacks through membrane; same material as membrane.

B. Cant Strips: Wood, pressure preservative treated; See Section 061000.

C. Place tapered insulation to the required slope pattern in accordance with manufacturer's instructions.

D. Lay boards with edges in moderate contact without forcing. Cut insulation to fit neatly to perimeter blocking and around penetrations through roof.

E. Tape joints of insulation in accordance with roofing and insulation manufacturers' instructions.
F. Do not install more insulation than can be covered with membrane in same day.

PART 3 EXECUTION

3.1 EXAMINATION

A. Verify that surfaces and site conditions are ready to receive work.
B. Verify deck is supported and secure.
C. Verify deck is clean and smooth, flat, free of depressions, waves, or projections, properly sloped and suitable for installation of roof system.
D. Verify deck surfaces are dry and free of snow or ice.
E. Verify that roof openings, curbs, and penetrations through roof are solidly set, and cant strips are in place.
F. Proceed with installation only after unsatisfactory conditions have been corrected.

3.2 INSTALLATION, GENERAL

A. Perform work in accordance with manufacturer's instructions, NRCA (WM), and Factory Mutual requirements applicable requirements.
B. Do not apply roofing membrane during cold or wet weather conditions.
C. Do not apply roofing membrane when ambient temperature is outside the temperature range recommended by manufacturer.
D. Do not apply roofing membrane to damp or frozen deck surface or when precipitation is expected or occurring.
E. Do not expose materials vulnerable to water or sun damage in quantities greater than can be weatherproofed the same day.

3.3 INSTALLATION - VAPOR RETARDER AND INSULATION, UNDER MEMBRANE

A. Install vapor retarder to deck surface with adhesive in accordance with manufacturer's instructions.
    1. Extend vapor retarder under cant strips and blocking to deck edge.
    2. Install flexible flashing from vapor retarder to air seal material of wall construction, lap and seal to provide continuity of the air barrier plane.
B. Ensure vapor retarder is clean and dry, continuous, and ready for application of insulation.
C. Attachment of Insulation: Embed insulation in adhesive in full contact, in accordance with roofing and insulation manufacturers' instructions.
D. Cover Boards: Fully adhere cover boards in accordance with roofing manufacturer's instructions and FM (AG) Factory Mutual requirements.
E. Lay subsequent layers of insulation with joints staggered minimum 6 inches from joints of preceding layer.
F. Place tapered insulation to the required slope pattern in accordance with manufacturer's instructions.
G. Lay boards with edges in moderate contact without forcing. Cut insulation to fit neatly to perimeter blocking and around penetrations through roof.
H. Tape joints of insulation in accordance with roofing and insulation manufacturers' instructions.
I. At roof drains, use factory-tapered boards to slope down to roof drains over a distance of 18 inches.
J. Do not install more insulation than can be covered with membrane in same day.

3.4 INSTALLATION - MEMBRANE

A. Roll out membrane, free from wrinkles or tears. Place sheet into place without stretching.

B. Shingle joints on sloped substrate in direction of drainage.

C. Fully Adhered Application: Apply adhesive to substrate at rate recommended by membrane manufacturer. Fully embed membrane in adhesive except in areas directly over or within 3 inches of expansion joints. Fully adhere one roll before proceeding to adjacent rolls.

D. [<>]At Vertical Surfaces and Parapet Walls: Apply adhesive to substrate at rate recommended in writing by membrane manufacturer to fully adhere the membrane. Fully embed membrane in adhesive except in areas directly over or within 3 inches of expansion joints. Fully adhere one roll before proceeding to adjacent rolls.

E. Overlap edges and ends and seal seams by heat welding, minimum 3 inches. Seal permanently waterproof. Apply uniform bead of sealant to joint edge.

F. At intersections with vertical surfaces:

1. Extend membrane over cant strips and up a minimum of 4 inches onto vertical surfaces.
2. Fully adhere flexible flashing over membrane and up to nailing strips.

G. Around roof penetrations, seal flanges and flashings with flexible flashing.

H. Coordinate installation of roof drains and sumps and related flashings.

3.5 FIELD QUALITY CONTROL

A. See Section 014000 - Quality Requirements for additional requirements.

B. Owner will provide testing and inspection services by a qualified testing agency to perform flood testing in accordance with ASTM D5957 and inspect seam field strength samples. Contractor to provide temporary construction and materials for testing in accordance with requirements.

C. Provide daily on-site attendance of roofing and insulation manufacturer's representative during installation of this work.

D. Arrange for membrane roofing manufacturer's technical representatives to inspect roofing installation on completion in the presence of the Architect, and to prepare an inspection report.

E. Repair or remove and replace components of membrane roofing that do not pass inspections and do not comply with specified requirements.

F. Additional testing and inspecting shall be performed by the Contractor to determine if replaced or additional work complies with specified requirements.

3.6 CLEANING

A. See Section 017000 - Execution and Closeout Requirements for additional requirements.

B. Remove bituminous markings from finished surfaces.

C. In areas where finished surfaces are soiled by work of this section, consult manufacturer of surfaces for cleaning advice and comply with their documented instructions.

D. Repair or replace defaced or damaged finishes caused by work of this section.

3.7 PROTECTION

A. Protect installed roofing and flashings from construction operations.

B. Where traffic must continue over finished roof membrane, protect surfaces using durable materials as indicated in Section 017610 - Temporary Protective Coverings.

END OF SECTION 075423

This page intentionally left blank

SECTION 221423
STORM DRAINAGE PIPING SPECIALTIES*AD01

PART 1 GENERAL

1.1 SECTION INCLUDES
- A. Roof and exterior surface drains.

1.2 RELATED REQUIREMENTS

1.3 REFERENCE STANDARDS
- A. ASME A112.6.4 - Roof, Deck, and Balcony Drains; 2022.
- B. NSF 14 - Plastics Piping System Components and Related Materials; 2025.

1.4 SUBMITTALS
- A. See Section 013000 - Administrative Requirements for submittal procedures.
- B. Product Data: Provide manufacturer's literature and data sheets for each product. Include information on fabrication materials, assembly of components, dimensions, ratings, finishes, rough-in requirements, and installed accessories.
- C. Shop Drawings:
  1. Provide dimensioned plans showing locations of drains for the following:
     a. Roof drains

1.5 DELIVERY, STORAGE, AND HANDLING
- A. See Section 017419 - Construction Waste Management and Disposal for packaging waste requirements.
- B. Receive, inspect, handle, and store products in accordance with manufacturer's instructions.
- C. Keep products in original manufacturer's packaging and protect from damage until ready for installation.
- D. Store products under cover and protected from weather and dirt. Elevate above grade.
- E. Store plastic products protected from direct sunlight.

PART 2 PRODUCTS

2.1 GENERAL REQUIREMENTS
- A. Plastic Storm Drainage Piping Specialties: Provide plastic products complying with NSF 14.
- B. Source Limitations: Furnish drains and storm drainage piping specialties of same kind by same manufacturer.

2.2 ROOF AND EXTERIOR SURFACE DRAINS
- A. Cast Iron Roof Drains and Overflow Roof Drains:
  1. Manufacturers:
     a. MIFAB, Inc: www.mifab.com/#sle.
     b. Zurn Water, LLC: www.zurn.com/#sle.
     c. Substitutions: See Section 016000 - Product Requirements.
  2. Assembly: ASME A112.6.4.
  3. Body: Lacquered cast iron with membrane clamping ring with gravel stop.
  4. Strainer: Removable cast iron dome with vandal-proof screws.

5. Overflow Drains: Provide 2-inch high external overflow waterdam or internal standpipe extension.
6. Accessories:
   a. Adjustable, extendable collar.
   b. Roof sump receiver.
7. Products:
   a. MIFAB, Inc; R1200 Large Sump Roof Drain: www.mifab.com/#sle.
   b. Zurn Water, LLC; Z100F: www.zurn.com/#sle.
   c. Substitutions: See Section 016000 - Product Requirements.

PART 3 EXECUTION

3.1 EXAMINATION

A. Verify conditions are satisfactory for installation prior to starting work.

3.2 INSTALLATION

A. Install products in accordance with manufacturer's instructions.
B. Maintain continuity of waterproofing membranes. Secure waterproofing membranes to drain clamping collars.
C. Install roof drains at low points of roof areas.

3.3 CLEANING

A. See Section 017000 - Execution and Closeout Requirements for additional requirements.
B. Clean debris from drains.
C. Clean grates and strainers prior to substantial completion walkthrough.

3.4 PROTECTION

A. Protect installed drains from accumulating dirt and debris through remainder of construction.
B. Protect installed products from damage due to subsequent construction operations.

END OF SECTION 221423

999990 - EXISTING HAZARDOUS MATERIAL INFORMATION

1.1 EXISTING HAZARDOUS MATERIAL INFORMATION

A. This Document with its referenced attachments is part of the Procurement and Contracting Requirements for the Project. They provide Owner's information for Bidders' convenience and are intended to supplement rather than serve in lieu of Bidders' own investigations. They are made available for Bidders' convenience and information. This Document and its attachments are not part of the Contract Documents.

B. An existing Hazardous Materials report for Project, prepared by TetraTech dated September 22, 2026, is available for viewing as appended to this Project Manual. *AD01

END OF 999990

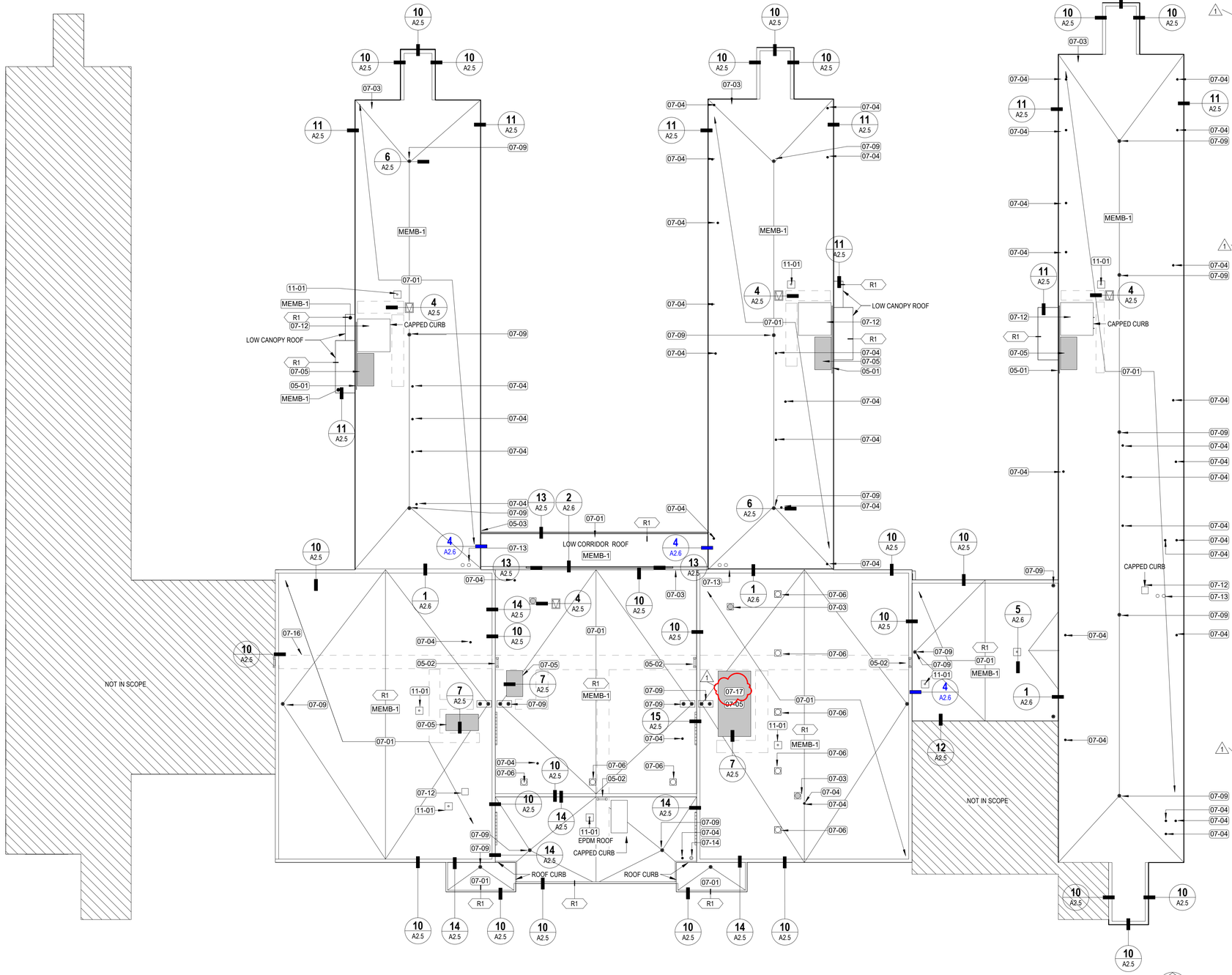

1 ROOF PLAN
1/16" = 1'-0"

16' 8' 0' 16' 32'
SCALE : 1/16" = 1'-0"

KEYNOTES

05-01	REINSTALL SALVAGED METAL GUARDRAILS/SAFETY RAILINGS AT DESIGNATED ROOFTOP LOCATIONS. CONTRACTOR TO CLEAN, INSPECT, AND PROVIDE NEW STAINLESS STEEL FASTENERS AND COMPATIBLE BASE MOUNTING HARDWARE. COORDINATE MOUNTING PENETRATIONS WITH ROOFING CONTRACTOR TO MAINTAIN MANUFACTURED MEMBRANE FLASHING AND WARRANTY REQUIREMENTS. PREP AND PAINT. VERIFY COLOR WITH OWNER.
05-02	REINSTALL SALVAGED ROOFTOP ACCESS LADDER AT LOCATION SHOWN ON DRAWINGS. CONTRACTOR TO CLEAN, INSPECT, AND PROVIDE NEW STAINLESS STEEL FASTENERS AND COMPATIBLE BRACKET MOUNTING HARDWARE. COORDINATE ALL WALL/ROOF PENETRATIONS WITH ROOFING CONTRACTOR TO PROVIDE PROPER FLASHING, SEALANT, AND WEATHERPROOF TERMINATIONS TO MAINTAIN ROOF WARRANTY. PREP AND PAINT. VERIFY COLOR WITH OWNER.
05-03	PAINT NEW LEADER TO MATCH EXISTING PAINT SCHEME OF ADJACENT WALL
07-01	PROVIDE & INSTALL NEW R-30 AVERAGE INSULATION, 1/2" GYPSUM COVER BOARD, AND ADHERE TPO MEMBRANE PER MANUFACTURER REQUIREMENTS. REFER TO PROJECT SPECIFICATIONS FOR ADD'L INFO.
07-03	PROVIDE & INSTALL NEW 24 GA PREFINISHED GALVANIZED STEEL ROOF EDGE COPING, W/ FASTENERS @ 12" OC TYP.
07-04	EXTEND EXISTING PVC VTR 12" MIN. ABOVE FINISHED ROOF SURFACING TO ACCOMMODATE NEW INSULATION DEPTH. PROVIDE NEW VTR BOOT AND BASE FLASHING PER DETAILED DRAWINGS AND MANUFACTURER REQUIREMENTS. REFER TO SPECS FOR ADD'L INFO.
07-05	PROVIDE & INSTALL NEW BLOCKING AS REQUIRED TO ACCOMMODATE INCREASED INSULATION ASSEMBLY DEPTH AND 24 GA PREFINISHED GALVANIZED STEEL CURB FLASHING AT EXISTING MECHANICAL ROOF CURBS W/ FASTENERS @ 12" O.C. TYP.
07-06	PROVIDE & INSTALL NEW BLOCKING AS REQUIRED TO ACCOMMODATE INCREASED INSULATION ASSEMBLY DEPTH AND 24 GA PREFINISHED GALVANIZED STEEL CURB FLASHING AT EXISTING SOLAR TUBE CURBS W/ FASTENERS @ 12" O.C. TYP.
07-09	PROVIDE & INSTALL NEW ROOF DRAIN, FASTENERS AND FLASHING PER DETAIL AND PLUMBING SPECIFICATION.
07-12	PROVIDE & INSTALL NEW 24 GA PREFINISHED GALVANIZED STEEL CAP FLASHING AT EXISTING CAPPED AND NON-MECHANICAL ROOF CURBS, W/ FASTENERS @ 12"" OC TYP. COORDINATE WITH NEW CURB FRAMING EXTENSION AND EPDM MEMBRANE BASE FLASHING
07-13	FLASHING AT FIRE STANDPIPE: PROVIDE PREFABRICATED RETROFIT SPLIT EPDM PIPE BOOT WITH STAINLESS STEEL CLAMPING RING AND LAP SEALANT. EXTEND FLASHING MIN. 8" ABOVE NEW FINISHED MEMBRANE SURFACE
07-14	FLASHING AT HEAT/SMOKE VENT: PROVIDE EPDM MEMBRANE BASE FLASHING OVER RAISED CURB ASSEMBLY. EXTEND MEMBRANE MIN. 8" ABOVE FINISHED ROOF SURFACE AND ADHERE TO VERTICAL CURB FACE. SEAL TOP EDGE UNDER EXISTING COUNTERFLASHING WITH CONTINUOUS TERMINATION BAR AND LAP SEALANT.
07-16	PROVIDE AND INSTALL ROOFTOP WALKWAY SYSTEM FROM ROOF ACCESS TO ALL SERVICEABLE MECHANICAL EQUIPMENT. SPACE WALKWAY SECTIONS 1" MINIMUM TO 3" MAXIMUM APART TO ALLOW FOR DRAINAGE. DO NOT EXTEND WALKWAY SECTIONS OVER ROOF VALLEYS; MAINTAIN 1" MINIMUM TO 3" MAXIMUM SPACING FOR DRAINAGE.
07-17	BUILD UP VOID BELOW EXISTING HVAC CURB/UNIT ABOVE TERMINATION BAR TO CREATE FLUSH, CONTINUOUS SUBSTRATE. EXTEND NEW TPO ROOFING MEMBRANE CONTINUOUSLY UP AND OVER BUILT-UP SUBSTRATE TO ELIMINATE EXISTING FIELD-FABRICATED SKIRT AND PREVENT WATER INTRUSION
11-01	ROOFTOP FALL PROTECTION ANCHOR: SECURE TO CONCRETE DECK MIN. 6'-0" FROM EDGES NEAR HATCHES/EQUIPMENT; DO NOT LOCATE IN VALLEYS, SWALES, OR WITHIN 3'-0" OF DRAINS.

ROOF PLAN LEGEND

- VENT THROUGH ROOF
- ROOF DRAIN
- ROOF ACCESS HATCH
- SIDEWALL LOUVER
- MECHANICAL ROOF TOP UNIT
- FIRE STANDPIPE
- FALL PROTECTION ANCHOR
- LADDER
- SOLAR TUBE
- EXHAUST FAN
- HEAT PIPE VENT

ROOF PLAN NOTES

1. PROVIDE ROOF CRICKETS AT ALL UPSLOPE AREAS OF MECHANICAL EQUIPMENT, CURBS AND ROOF HATCHES.
2. CRICKETS TO SLOPE POSITIVELY 1/4" MINIMUM PER FOOT FROM HORIZONTAL PLANE.
3. MAINTAIN 1/8" PER FOOT MINIMUM FOR ALL CRICKET VALLEYS.
4. CRICKETS SHOWN ARE FOR REFERENCE ONLY; CONTRACTOR TO PROVIDE DETAILED LAYOUT PLAN FOR ARCHITECT'S REVIEW PRIOR TO INSTALLATION.
5. ROOF PENETRATIONS OF ANY KIND SHALL NOT BE LOCATED IN CRICKET VALLEYS.
6. IN ADDITION TO OPENING AND EQUIPMENT SHOWN ON THIS DRAWING, ANY OWNER PROVIDED MECHANICAL AND ELECTRICAL RECORD DRAWINGS, INDICATE ADDITIONAL ITEMS PENETRATING THE ROOF ASSEMBLY; PROVIDE APPROPRIATE FLASHING.
7. INDICATE ADDITIONAL ITEMS PENETRATING THE ROOF ASSEMBLY; PROVIDE APPROPRIATE FLASHING.
8. REFERENCE EXISTING CONDITIONS AND ARCH DRAWINGS FOR VENT LOCATIONS, EQUIPMENT LOCATIONS, AND ADDITIONAL INFORMATION, TYP.
9. IF NEW INSULATION INCREASES OVERALL PARAPET HEIGHT BY LESS THAN 3", PROVIDE ADDITIONAL/EXTENDED FLASHING AS REQUIRED TO MAINTAIN MINIMUM WATERPROOFING OVERLAPS AND SHINGLE-FASHION DRAINAGE. PREP, PAINT, AND FINISH TO MATCH EXISTING.
10. MINIMUM THICKNESS OF ABOVE-DECK TAPERED ROOF INSULATION AT IT'S LOWEST POINT, GUTTER EDGE, ROOF DRAIN, OR SCUPPER SHALL NOT BE LESS THAN ONE INCH.
11. TAPERED INSULATION FIELD SLOPE: PROVIDE TAPERED INSULATION AT 1/8" PER FOOT MINIMUM FIELD SLOPE (PER 2024 IBC SECTION 1512.1, EXCEPTION 1 AND 2024 IEBC SECTION 705.1, EXCEPTION 1) TO ACHIEVE POSITIVE DRAINAGE AND LIMIT PERIMETER/PARAPET HEIGHT. MAINTAIN R-30 AVERAGE THERMAL RESISTANCE PER 2024 IECC SECTION C402.2.1.1.

R-1 ASSEMBLY

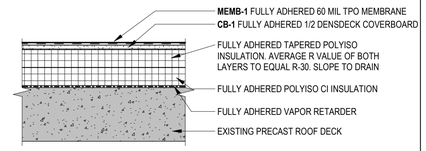

ROOF PLAN LEGEND

MEMB-1 FULLY ADHERED TPO

MONTANA STATE UNIVERSITY

MSU-CPDC
MONTANA STATE UNIVERSITY
BOZEMAN, MONTANA
PHONE: 406.994.5413
FAX: 406.994.5665

100% BIDDING DOCUMENTS

JOHNSTONE CENTER RE-ROOF

A&E SMA

DRAWN BY:	JB
REVIEWED BY:	CF

REV.	DESCRIPTION	DATE
1	Addendum 1.0	11/24/26

STATE OF MONTANA · BILLINGS · DUSTIN W. EATON · 3380 · MONTANA · LICENSED ARCHITECT

PPA #:	26-1535
A/E #	26-1535
A&E PROJ #:	23123.00

SHEET TITLE
ROOF PLAN

SHEET
A2.3

DATE
11/24/2026

MONTANA STATE UNIVERSITY

PLANNING, DESIGN & CONSTRUCTION
Sixth Avenue and Grant Street | P.O. Box 172760 | Bozeman, Montana, 59717-2760
Phone: (406) 994-5413 | Fax: (406) 994-5665

Date: November 16, 2026
PPA No: 26-1535
Project Name: Johnstone Complex Reroof

Pre-Bid Walkthrough Sign-in Sheet

NAME	COMPANY	PHONE	E-MAIL
Jake K.	RMR	406.600.9211	jake@RM-Reps.com
Logan Castrillo	Axiom D7	406.916.2857	lcastillo@axiomd7.net
Owen Wolf	Dave Loden Const.	307.762.1703	Owolf100@hotmail.com
Kevin Edwards	Convoy Supply	406.594.9947	kedwards@convoy-supply.com
Kevin Keane	K&K Roofing	406.491.8514	kevin@kandkroofing.com
Josh Johnson	Pacific Supply	406.860.3380	Joshua.johnson@paccoast.com
Craig Downing	Platinum Peak Roofing	406.672.7825	Platinumpeakroofing1@gmail.com
Patrick Bratton	Summit Roofing	406.829.9100	patrick@summitroofing.com
John Hoover	Ace Roofing	406.600.2339	jthoover@aceroofingmt.com
Michale Palmer	Ever-Green	406.548.7508	michael@evergreenmt.com
Conrad H.	Ever-Green	406.550.6062	conrad@evergreenmt.com
Jake M.	Empire Roofing	406.425.1808	jake@empireroofingmt.com

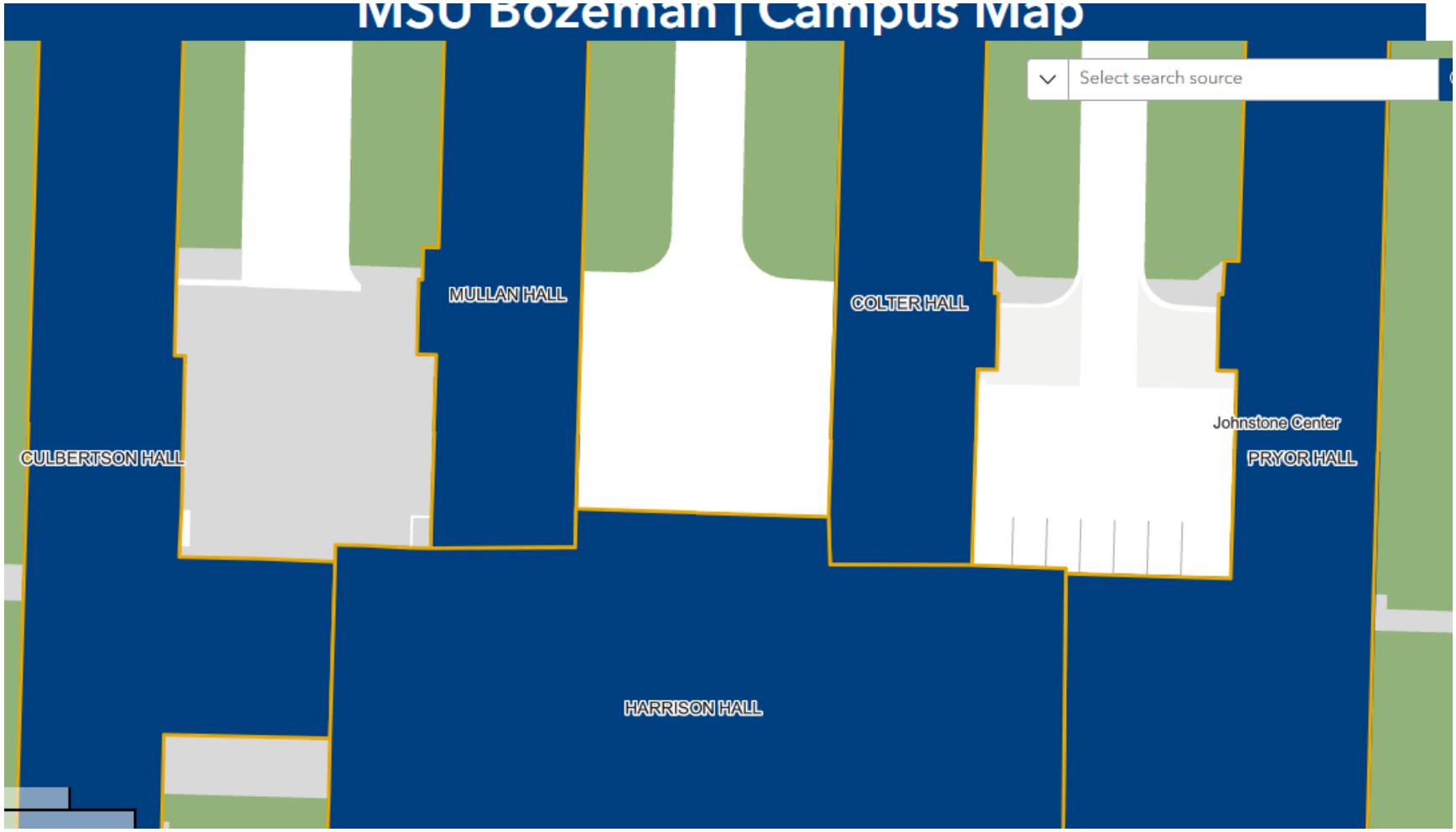
MSU Bozeman | Campus Map
Select search source
MULLAN HALL
COLTER HALL
Johnstone Center
PRYOR HALL
CULBERTSON HALL
HARRISON HALL

9 inches

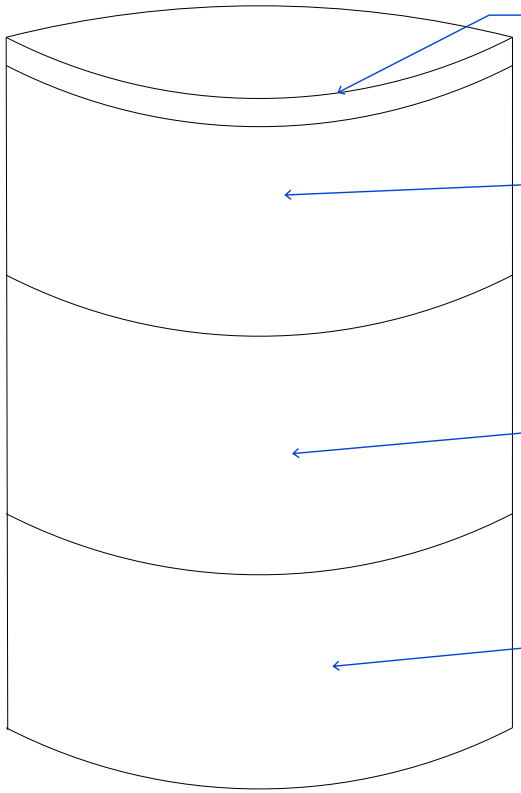

LEGEND

TETRA TECH
www.tetratech.com
7100 Commercial Ave, Suite 4
Billings, Montana 59101
PHONE: 406-248-9161 FAX: 406-248-9282

COLTER ROOF CORE
PRE-RENOVATION ASBESTOS INSPECTION
ROOF CORE LAYERS
JOHNSTONE CENTER ROOFS
MONTANA STATE UNIVERSITY BOZEMAN, MONTANA

Project No.:	117-8225055
Designed By:	CL
Drawn By:	CL
Checked By:	RHJ

F-07

Not To Scale

Copyright Tetra Tech

10 inches

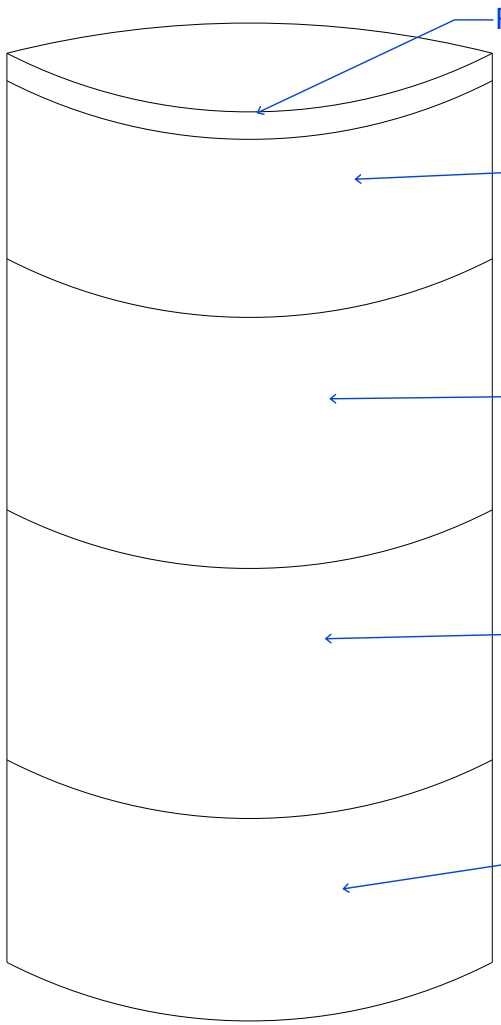

LEGEND

TETRA TECH
www.tetratech.com
7100 Commercial Ave, Suite 4
Billings, Montana 59101
PHONE: 406-248-9161 FAX: 406-248-9282

HARRISON EAST, WEST AND LOWER
PRE-RENOVATION ASBESTOS INSPECTION
ROOF CORE LAYERS
JOHNSTONE CENTER ROOFS
MONTANA STATE UNIVERSITY BOZEMAN, MONTANA

Project No.:	117-8225055
Designed By:	CL
Drawn By:	CL
Checked By:	RHJ

F-06

Not To Scale

Copyright Tetra Tech

14 inches

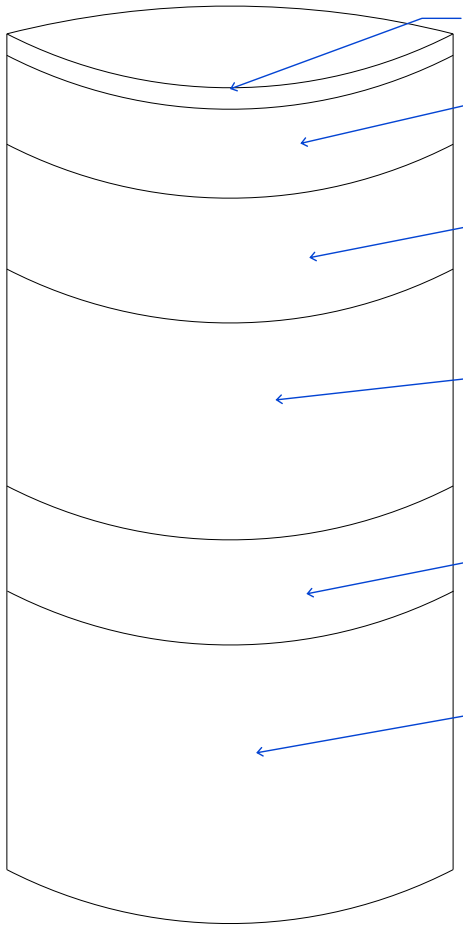

LEGEND

TETRA TECH
www.tetratech.com
7100 Commercial Ave, Suite 4
Billings, Montana 59101
PHONE: 406-248-9161 FAX: 406-248-9282

HARRISON UPPER CENTER
PRE-RENOVATION ASBESTOS INSPECTION
ROOF CORE LAYERS
JOHNSTONE CENTER ROOFS
MONTANA STATE UNIVERSITY BOZEMAN, MONTANA

Project No.:	117-8225055
Designed By:	CL
Drawn By:	CL
Checked By:	RHJ

F-05

Not To Scale

Copyright Tetra Tech

4 inches

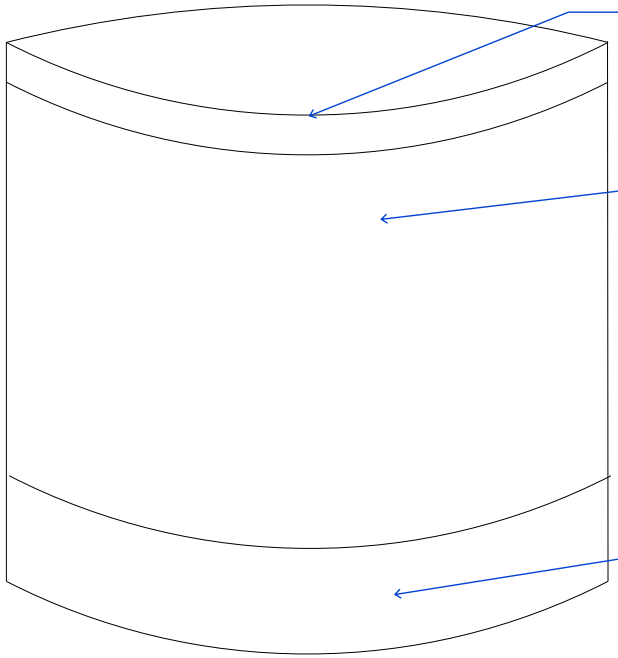

LEGEND

TETRA TECH
www.tetratech.com
7100 Commercial Ave, Suite 4
Billings, Montana 59101
PHONE: 406-248-9161 FAX: 406-248-9282

JOHNSTONE ROOF CORE
PRE-RENOVATION ASBESTOS INSPECTION
ROOF CORE LAYERS
JOHNSTONE CENTER ROOFS
MONTANA STATE UNIVERSITY BOZEMAN, MONTANA

Project No.:	117-8225055
Designed By:	CL
Drawn By:	CL
Checked By:	RHJ

F-04

Not To Scale

Copyright Tetra Tech

9 inches

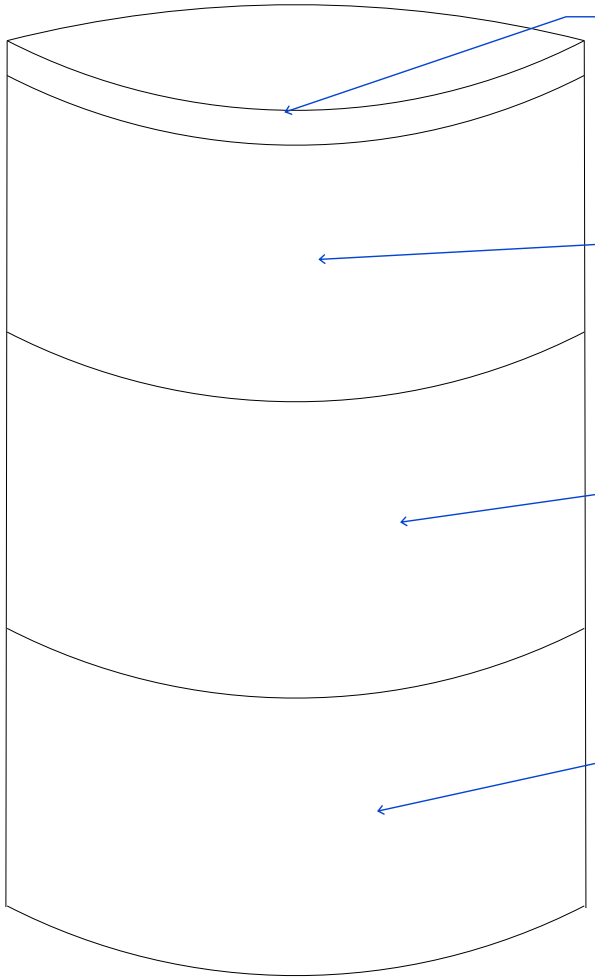

LEGEND

TETRA TECH
www.tetratech.com
7100 Commercial Ave, Suite 4
Billings, Montana 59101
PHONE: 406-248-9161 FAX: 406-248-9282

MULLAN ROOF CORE
PRE-RENOVATION ASBESTOS INSPECTION
ROOF CORE LAYERS
JOHNSTONE CENTER ROOFS
MONTANA STATE UNIVERSITY BOZEMAN, MONTANA

Project No.:	117-8225055
Designed By:	CL
Drawn By:	CL
Checked By:	RHJ

F-03

Not To Scale

Copyright Tetra Tech

12 inches

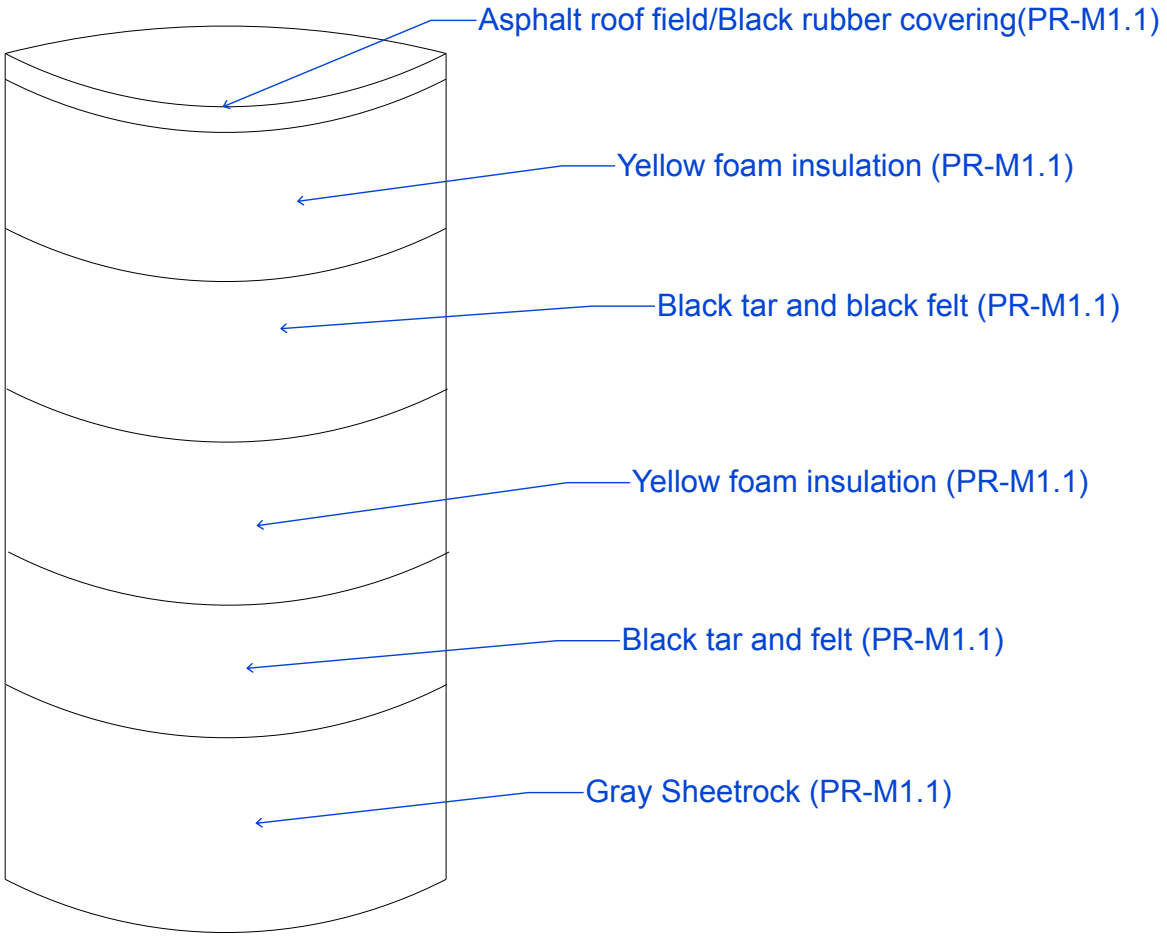

LEGEND

TETRA TECH
www.tetratech.com
7100 Commercial Ave, Suite 4
Billings, Montana 59101
PHONE: 406-248-9161 FAX: 406-248-9282

PRYOR ROOF CORE
PRE-RENOVATION ASBESTOS INSPECTION
ROOF CORE LAYERS
JOHNSTONE CENTER ROOFS
MONTANA STATE UNIVERSITY BOZEMAN, MONTANA

Project No.:	117-8225055
Designed By:	CL
Drawn By:	CL
Checked By:	RHJ

F-02

Not To Scale

Copyright Tetra Tech

2 inches

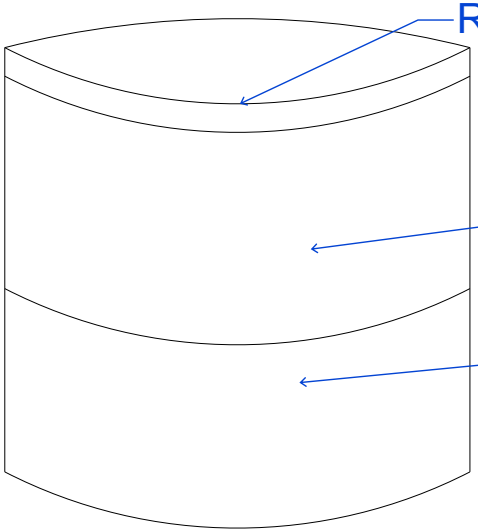

Rubber roof membrane/White vinyl covering (SB-M1.1)

Yellow foam insulation with woven covering (SB-M1.1)

White Sheetrock with brown paper (SB-M1.1)

LEGEND

TETRA TECH
www.tetratech.com
7100 Commercial Ave, Suite 4
Billings, Montana 59101
PHONE: 406-248-9161 FAX: 406-248-9282

SKYBRIDGE ROOF CORE
PRE-RENOVATION ASBESTOS INSPECTION
ROOF CORE LAYERS
JOHNSTONE CENTER ROOFS
MONTANA STATE UNIVERSITY BOZEMAN, MONTANA

Project No.:	117-8225055
Designed By:	CL
Drawn By:	CL
Checked By:	RHJ

F-01

Not To Scale

Copyright Tetra Tech